54LVTH162245

16-Bit Bus Transceivers with 3-State Outputs

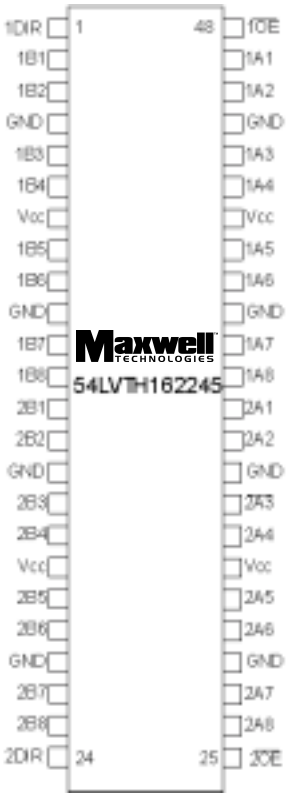

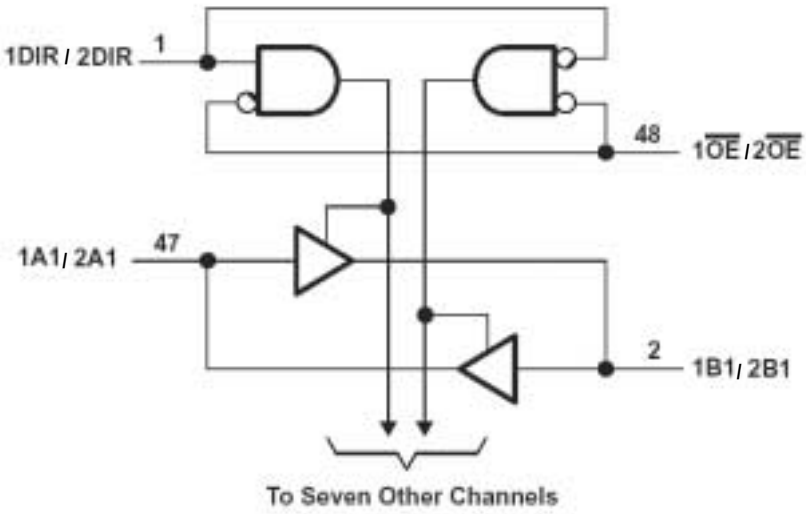

Logic Diagram

FEATURES:

- A-Port outputs have equivalent 22-Ω series resistors, so no external resistors are required
- Support mixed-mode signal operation (5V input and output voltages with 3.3V V_{CC})
- Support unregulated battery operation down to 2.7V
- Typical V_{OLP} (output ground bounce) < 0.8V at V_{CC} = 3.3V, T_A = 25˚C
- I_{OFF} and power-up 3-state support hot insertion
- Bus hold on data inputs eliminates the need for external pullup/pulldown resistors
- Distributed V_{CC} and GND pin configuration minimizes high-speed switching noise
- Flow-through architecture optimizes PCB layout
- Total dose hardness:
  - > 100 krad (Si), depending upon space mission
- Package: 48 pin RAD-PAK® flat pack

DESCRIPTION:

Maxwell Technologies' 54LVTH162245 devices are 16-bit (dual-octal) non-inverting 3-state transceivers designed for low-voltage (3.3V) V_{CC} operation, but with the capability to provide a TTL interface to a 5V system environment. These devices can be used as two 8-bit transceivers or one 16-bit transceiver. The devices allow data transmission from the A bus to the B bus or form the B bus to the A bus, depending on the logic level at the direction-control (DIR) input. The output enable ($\overline{OE}$) input can be used to disable the device so that the buses are effectively isolated. The A-port outputs, which are designed to source or sink up to 12 mA, include equivalent 22-Ω series resistors to reduce overshoot and undershoot.

Maxwell Technologies' patented RAD-PAK® packaging technology incorporates radiation shielding in the microcircuit package. It eliminates the need for box shielding while providing the required radiation shielding for a lifetime in orbit or space mission. In a GEO orbit, RAD-PAK provides greater than 100 krad (Si) radiation dose tolerance. This product is available with screening up to Class S.

(858) 503-3300 - Fax: (858) 503-3301 - www.maxwell.com

©2002 Maxwell Technologies
All rights reserved.

.

TABLE 1. PINOUT DESCRIPTION

PIN	SYMBOL	DESCRIPTION
1, 24	1DIR - 2DIR	Direction Control
2, 3, 5, 6, 8, 9, 11, 12	1B1 - 1B8	Output
4, 10, 15, 21, 28, 34, 39, 45	GND	Ground
7, 18, 31, 42	V_{CC}	Supply Voltage
13, 14, 16, 17, 19, 20, 22, 23	2B - 2B8	Output
25, 48	$2\overline{OE}$ - $1\overline{OE}$	Output Enable
26, 27, 29, 30, 32, 33, 35, 36	2A8 - 2A1	Input
37, 38, 40, 41, 43, 44, 46, 47	1A8 - 1A1	Input

TABLE 2. 54LVTH162245 ABSOLUTE MAXIMUM RATINGS [1]

PARAMETER	SYMBOL	MIN	MAX	UNIT
Supply voltage range	V_{CC}	-0.5	4.6	V
Input voltage range [2]	V_I	-0.5	7	V
Voltage range applied to any output in the high-impedance or power-off state [2]	V_O	-0.5	7	V
Voltage range applied to any output in the high state [2]	V_O	-0.5	V_{CC} + 0.5	V
Current into any output in the low state B Port A Port	I_O	 -- --	 96 30	mA
Current into any output in the high state [3] B Port A Port	I_O	 -- --	 48 30	mA
Input clamp current	I_{IK} (V_I < 0)	-50	--	mA
Output clamp current	I_{OK} (V_O < 0)	-50	--	mA
Thermal resistance	Θ_{JC}	--	5	˚C/W
Operating temperature range	T_A	-55	125	°C
Storage temperature range	T_S	-65	150	˚C
Power Dissipation	PD	--	1	W

1. Stresses beyond those listed under “absolute maximum ratings” may cause permanent damage to the device. These are stress ratings only, and functional operation of the device at these or any other conditions beyond those indicated under “recommended operating conditions” is not implied. Exposure to absolute-maximum-rated conditions for extended periods may affect device reliability.
2. The input and output negative-voltage ratings may be exceeded if the input and output clamp-current ratings are observed.
3. This current flows only when the output is in the high state and $V_O > V_{CC}$.

©2002 Maxwell Technologies
All rights reserved.

TABLE 3. DELTA LIMITS

PARAMETER	VARIATION
$I_{CC(OL)}$	±10% of specified value in Table 5
$I_{CC(OH)}$	±10% of specified value in Table 5
$I_{CC(OD)}$	±10% of specified value in Table 5

TABLE 4. 54LVTH162245 RECOMMENDED OPERATING CONDITIONS [1]

PARAMETER		SYMBOL	MIN	MAX	UNIT
Supply voltage		V_{CC}	2.7	3.6	V
High-level input voltage		V_{IH}	2	--	V
Low-level input voltage		V_{IL}	--	0.8	V
Input voltage		V_I	--	5.5	V
High-level output current	A port	I_{OH}	--	-12	mA
	B port		--	-24	
Low-level output current	A port	I_{OL}	--	12	mA
	B port		--	48	
Input transition rise or fall rate	Outputs enabled	$\Delta t/\Delta v$	--	10	ns/V
Power-up ramp rate		$\Delta t/\Delta V_{CC}$	200	--	µs/V
Operating temperature		T_A	-55	125	˚C

1. All unused control inputs of the device must be held at high or low ensure proper device operation.

TABLE 5. 54LVTH162245 DC ELECTRICAL CHARACTERISTICS

(V_{CC} = 3.3V ±10%, T_A = -55 TO +125 ˚C, UNLESS OTHERWISE SPECIFIED)

PARAMETER	SYMBOL	TEST CONDITIONS			SUBGROUPS	MIN	MAX	UNIT
Input Clamp Voltage	V_{IK}	V_{CC} = 2.7	I_I = -18 mA		1, 2, 3	--	-1.2	V
High-Level Output Voltage	V_{OH}	V_{CC} = 2.7V to 3.6V	I_{OH} = -100 µA	A Port	1, 2, 3	V_{CC} -0.2	--	V
		V_{CC} = 3V	I_{OH} = -12 mA			2	--	
		V_{CC} = 2.7V to 3.6V	I_{OH} = -100 µA	B Port	1, 2, 3	V_{CC} -0.2	--	
		V_{CC} = 2.7V	I_{OH} = -8 mA			2.4		
		V_{CC} = 3V,	I_{OH} = -24 mA			2		

©2002 Maxwell Technologies
All rights reserved.

TABLE 5. 54LVTH162245 DC ELECTRICAL CHARACTERISTICS

(V_{CC} = 3.3V ±10%, T_A = -55 TO +125 ˚C, UNLESS OTHERWISE SPECIFIED)

PARAMETER	SYMBOL	TEST CONDITIONS			SUBGROUPS	MIN	MAX	UNIT
Low-Level Output Voltage	V_{OL}	V_{CC} = 2.7V to 3.6V	I_{OL} = 100 µA	A Port	1, 2, 3	--	0.2	V
		V_{CC} = 3V	I_{OL} = 12 mA			--	0.8	
		V_{CC} = 2.7V	I_{OL} = 100 µA	B Port	1, 2, 3	--	0.2	
			I_{OL} = 24 mA			--	0.5	
		V_{CC} = 3V	I_{OL} = 16 mA			--	0.4	
			I_{OL} = 32 mA				0.5	
			I_{OL} = 48 mA				0.55	
Input Current	I_I	V_{CC} = 3.6V	VI = VCC or GND	Control inputs	1, 2, 3	--	±1	µA
		V_{CC} = 0 or 3.6V	V_I = 5.5V			--	10	
		V_{CC} = 3.6V	V_I = 5.5V	A or B Ports	1, 2, 3	--	20	
			V_I = V_{CC}				5	
			V_I = 0			--	-10	
Hold Current	$I_{I(HOLD)}$	V_{CC} = 3V	V_I = 0.8V	A Inputs	1, 2, 3	75	--	µA
			V_I = 2V			-75	--	
Power Up Current	I_{OZPU}[2]	V_{CC} = 0 to 1.5V, V_O = 0.5V to 3V, $\overline{OE}$ = don't care			1, 2, 3	--	±100	µA
Power Down Current	I_{OZPD}[2]	V_{CC} = 1.5V to 0, V_O = 0.5V to 3V, $\overline{OE}$ = don't care			1, 2, 3	--	±100	µA
Supply Current	I_{CC}	V_{CC} = 3.6V		Outputs high	1, 2, 3	--	0.19	mA
		I_O = 0		Outputs low	1, 2, 3	--	5	
		V_I = V_{CC} or GND		Outputs disabled	1, 2, 3	--	0.19	
Delta Supply Current	ΔI_{CC}[1]	V_{CC} = 3V to 3.6V, One input at V_{CC} -0.6V, Other inputs at V_{CC} or GND			1, 2, 3	--	0.3	mA
Input Capacitance	C_I[2]	V_I = 3V or 0			1, 2, 3	--	8	pF
Input Output Capacitance	C_O[2]	V_O = 3V or 0			1, 2, 3	--	15	pF

1. This is the increase in supply current for each input that is at the specified TTL voltage level rather than V_{CC} or GND.
2. Guaranteed by design.

©2002 Maxwell Technologies
All rights reserved.

TABLE 6. 54LVTH162245 AC ELECTRICAL CHARACTERISTICS

(V_{CC} = 3.3V ±10%, T_A = -55 TO +125 ˚C, UNLESS OTHERWISE SPECIFIED)

PARAMETER	SYMBOL	SUBGROUPS	V_{CC} = 3.3V ± 0.3		V_{CC} = 2.7V		UNIT
			MIN	MAX	MIN	MAX	
Propagation Delay Time A to B	t_{PLH}	9, 10, 11	1	3.5	--	4	ns
	t_{PHL}	9, 10, 11	1	3.5	--	3.9	
Propagation Delay Time B to A	t_{PLH}	9, 10, 11	1	4.3	--	5.3	ns
	t_{PHL}	9, 10, 11	1	4.2	--	4.5	
Output Enable Time $\overline{OE}$ to B	t_{PZH}	9, 10, 11	1	4.8	--	5.9	ns
	t_{PZL}	9, 10, 11	1	4.8	--	5.5	
Output Enable Time $\overline{OE}$ to A	t_{PZH}	9, 10, 11	1	5.5	--	7.2	ns
	t_{PZL}	9, 10, 11	1	5.4	--	6.4	
Output Disable Time $\overline{OE}$ to B	t_{PHZ}	9, 10, 11	1	5.5	--	5.8	ns
	t_{PLZ}	9, 10, 11	1	5.5	--	5.8	
Output Disable Time $\overline{OE}$ to A	t_{PHZ}	9, 10, 11	1	5.8	--	6.5	ns
	t_{PLZ}	9, 10, 11	1	6.3	--	6.3	
Output Skew	$t_{sk(o)}$	9, 10, 11	--	--	--	--	ns

TABLE 7. FUNTION TABLE

(EACH 8-BIT SECTION)

INPUTS		OPERATION
$\overline{OE}$	DIR	
L	L	B data to A bus
l	H	A data to B bus
H	X	Isolation

©2002 Maxwell Technologies
All rights reserved.

FIGURE 1. LOAD CIRCUIT

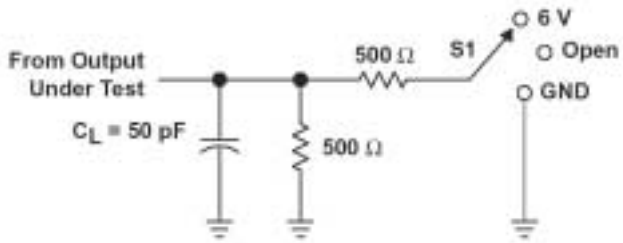

Figure Note:

1. C_L includes probe and jig capacitance.

PARAMETER MEASUREMENT INFORMATION

TEST	S1
t_{PLH}/t_{PHL}	Open
t_{PLZ}/t_{PZL}	6V
t_{PHZ}/t_{PZH}	GND

FIGURE 2. PULSE DURATION

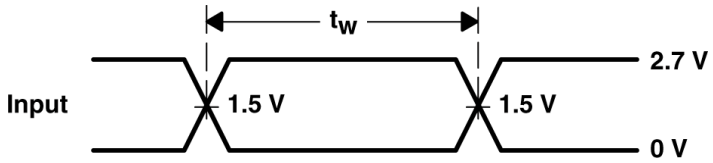

FIGURE 3. SETUP AND HOLD TIMES

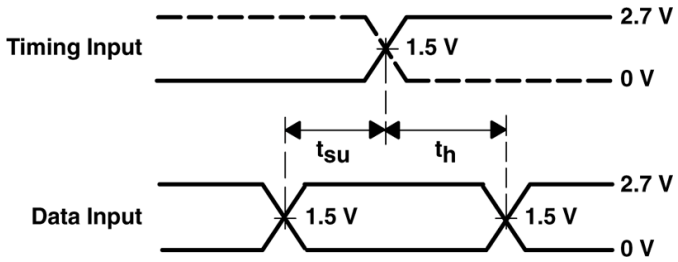

©2002 Maxwell Technologies
All rights reserved.

FIGURE 4. PROPAGATION DELAY TIMES INVERTING AND NONINVERTING OUTPUTS

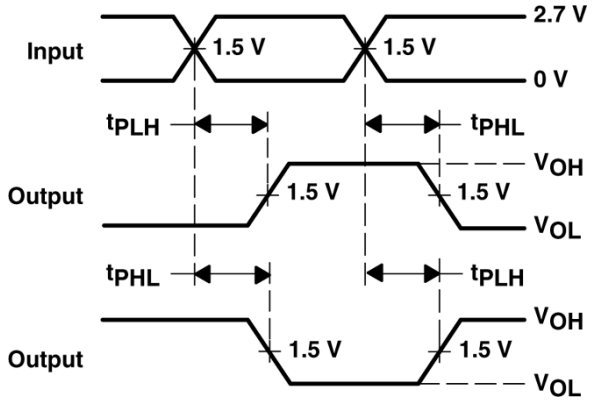

FIGURE 5. ENABLE AND DISABLE TIMES LOW- AND HIGH-LEVEL ENABLING

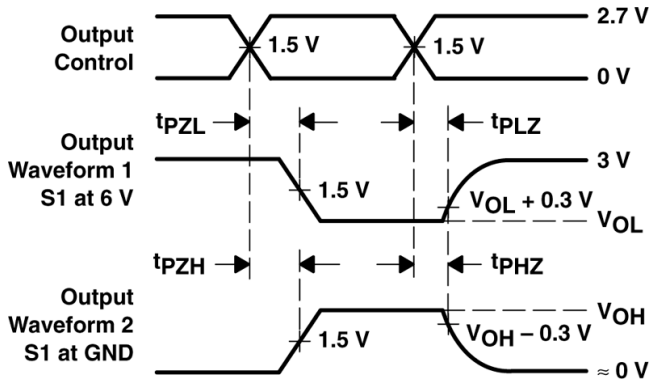

Figure Note:

2. Waveform 1 is for an output with internal conditions such that the output is low except when disabled by The output control.
   Waveform 2 is for an output with internal conditions such that the output is high except when disabled by the output control.

©2002 Maxwell Technologies
All rights reserved.

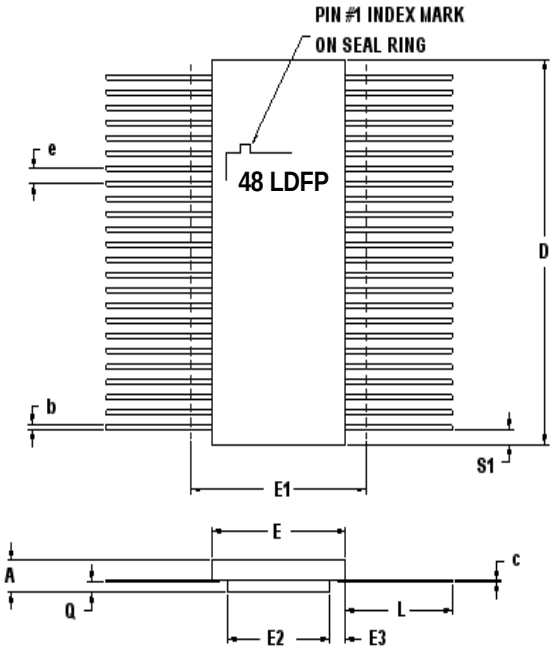

48 PIN RAD-PAK® FLAT PACKAGE

SYMBOL	DIMENSION		
	MIN	NOM	MAX
A	0.144	0.160	0.165
b	0.008	0.010	0.014
c	0.004	0.006	0.007
D	--	0.620	0.640
E	0.370	0.380	0.390
E1	--	--	0.410
E2	0.200	0.210	0.220
E3	0.075	0.085	--
e	0.025 BSC		
L	0.275	0.285	0.295
Q	0.013	0.019	0.025
S1	0.005	0.018	--
N	48		

Note: All dimensions in inches

©2002 Maxwell Technologies
All rights reserved.

Important Notice:

These data sheets are created using the chip manufacturer's published specifications. Maxwell Technologies verifies functionality by testing key parameters either by 100% testing, sample testing or characterization.

The specifications presented within these data sheets represent the latest and most accurate information available to date. However, these specifications are subject to change without notice and Maxwell Technologies assumes no responsibility for the use of this information.

Maxwell Technologies' products are not authorized for use as critical components in life support devices or systems without express written approval from Maxwell Technologies.

Any claim against Maxwell Technologies must be made within 90 days from the date of shipment from Maxwell Technologies. Maxwell Technologies' liability shall be limited to replacement of defective parts.

©2002 Maxwell Technologies
All rights reserved.

Product Ordering Options

Model Number

54LVTH162245 RP F X

Feature	Option Details
Screening Flow	Monolithic S = Maxwell Class S B = Maxwell Class B I = Industrial (testing @ -55°C, +25°C, +125°C) E = Engineering (testing @ +25°C)
Package	F = Flat Pack
Radiation Feature	RP = RAD-PAK® package
Base Product Nomenclature	16-Bit Bus Transceivers with 3-State Outputs

©2002 Maxwell Technologies
All rights reserved.